xGRID Installation track set -

12 380 970 90

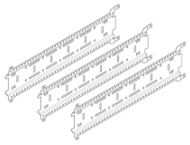

- width 555mm
- height 135 mm
- depth 12 mm
- retaining screws and plugs

This set contains 3 xGrid installation tracks and includes fixing material

More about the xGRID installation track can be found in the Shower Book brochure

xGRID Installation track set -

12 380 970 90

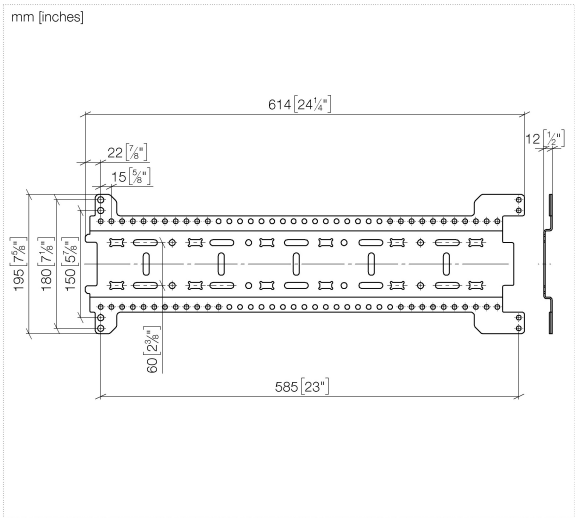

xGRID Installation track set -

12 380 970 90

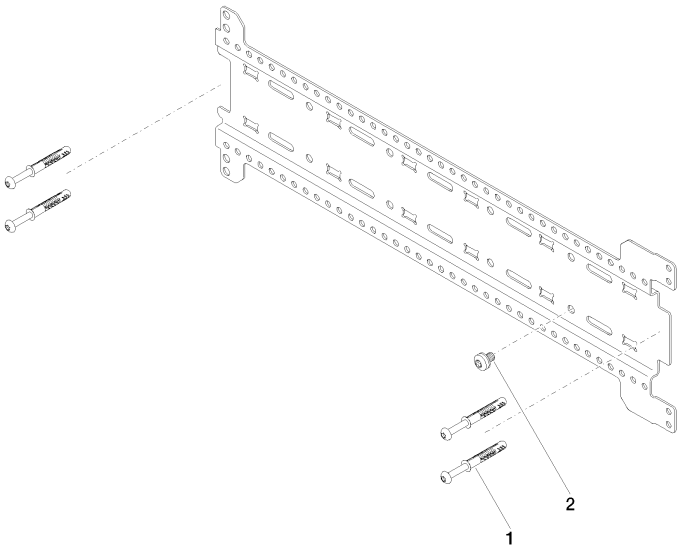

Spare parts list

No.	Item Number	Name	Quantity used	Delivery time
1	04 30 31 054 00 90	fixing set	6	2
2	04 30 30 212 00 90	fixing set	3	60